TRUE MANUFACTURING CO., INC.
U.S.A. FOODSERVICE DIVISION
2001 East Terra Lane • O'Fallon, Missouri 63366-4434 • (636)240-2400
Fax (636)272-2408 • Toll Free (800)325-6152 • Intl Fax# (001)636-272-7546
Parts Dept. (800)424-TRUE • Parts Dept. Fax# (636)272-9471 • www.truemfg.com

Project Name: _____
Location: _____
Item #: _____ *Qty:* _____
Model #: _____

AIA #
SIS #

Model:
TUC-36-LP-HC

Undercounter:
Low Profile Solid Door Refrigerator with Hydrocarbon Refrigerant

TUC-36-LP-HC

- Designed using the highest quality materials and components to provide the user with colder product temperatures, lower utility costs, exceptional food safety and the best value in today's food service marketplace.
- "Low Profile" models are designed to slide easily under custom built countertops. 1½" (39 mm) diameter dual swivel castors. 31⅞" (810 mm) work surface height.
- Factory engineered, self-contained, capillary tube system using environmentally friendly R290 hydro carbon refrigerant that has zero (0) ozone depletion potential (ODP), & three (3) global warming potential (GWP).
- High capacity, factory balanced refrigeration system that maintains cabinet temperatures of 33°F to 38°F (.5°C to 3.3°C) for the best in food preservation.
- All stainless steel front, top and ends. Corrosion resistant GalFan coated steel back.
- Interior - attractive, NSF approved, clear coated aluminum liner with stainless steel floor.
- Self closing doors. Positive seal, torsion type closure system.
- Foamed-in-place using a high density, polyurethane insulation that has zero ozone depletion potential (ODP) and zero global warming potential (GWP).

ROUGH-IN DATA

Specifications subject to change without notice.
Chart dimensions rounded up to the nearest ⅛" (millimeters rounded up to next whole number).

Model	Doors	Shelves	Cabinet Dimensions (inches) (mm) L	D†	H*	HP	Voltage	Amps	NEMA Config.	Cord Length (total ft.) (total m)	Crated Weight (lbs.) (kg)
TUC-36-LP-HC	2	4	36⅜ 924	30⅛ 766	29¾ 756	⅙ N/A	115/60/1	2.0 N/A	5-15P	11 3.35	TBD TBD

† Depth does not include 1" (26 mm) for rear bumpers.
* Height does not include 2⅛" (54 mm) for castors.

MADE WITH INNOVATION IN THE USA · 5 YEAR COMPRESSOR WARRANTY USA · c UL us · CLASSIFIED UL ENR · natural refrigerant.

6/18-A Printed in U.S.A.

APPROVALS:

AVAILABLE AT:

Model:

TUC-36-LP-HC

Undercounter:
Low Profile Solid Door Refrigerator with Hydrocarbon Refrigerant

STANDARD FEATURES

DESIGN
- True's undercounter's are designed with enduring quality and value that protects your long term investment. Our commitment to using the highest quality materials and oversized refrigeration ensures exceptional food preservation.
- "Low Profile" models are designed to slide easily under custom built countertops.

REFRIGERATION SYSTEM
- Factory engineered, self-contained, capillary tube system using environmentally friendly R290 hydro carbon refrigerant that has zero (0) ozone depletion potential (ODP), & three (3) global warming potential (GWP).
- Energy efficient, factory balanced refrigeration system with guided airflow to provide uniform product temperatures.
- High capacity, factory balanced refrigeration system that maintains cabinet temperatures of 33°F to 38°F (.5°C to 3.3°C) for the best in food preservation.
- State of the art, electronically commutated evaporator and condenser fan motors. ECM motors operate at higher peak efficiencies and move a more consistent volume of air which produces less heat, reduces energy consumption and provides greater motor reliability.
- Condensing unit access located in back, slides out for easy maintenance.

CABINET CONSTRUCTION
- Exterior - stainless steel front, top and ends. Corrosion resistant GalFan coated steel back.
- Interior - attractive, NSF approved, clear coated aluminum liner. Stainless steel floor with coved corners.
- Insulation - entire cabinet structure and solid doors are foamed-in-place using a high density, polyurethane insulation that has zero ozone depletion potential (ODP) and zero global warming potential (GWP).
- 1½" (39 mm) diameter dual swivel castors permits easy placement. 31⅞" (810 mm) work surface height.

DOORS
- Stainless steel exterior with clear aluminum liner to match cabinet interior.
- Each door fitted with 12" (305 mm) long recessed handle that is foamed-in-place with a sheet metal interlock to ensure permanent attachment.
- Positive seal self-closing doors with 90° stay open feature. Doors swing within cabinet dimensions.
- Magnetic door gaskets of one piece construction, removable without tools for ease of cleaning.

SHELVING
- Four (4) adjustable, heavy duty PVC coated wire shelves. Two (2) top shelves are 15 9/16"L x 20¼"D (396 mm x 515 mm), Two (2) bottom shelves are 15 9/16"L x 13¾"D (396 mm x 350 mm). Four (4) chrome plated shelf clips included per shelf.
- Shelf support pilasters made of same material as cabinet interior; shelves are adjustable on ½" (13 mm) increments.

MODEL FEATURES
- Evaporator is epoxy coated to eliminate the potential of corrosion.
- NSF/ANSI Standard 7 compliant for open food product.

ELECTRICAL
- Unit completely pre-wired at factory and ready for final connection to a 115/60/1 phase, 15 amp dedicated outlet. Cord and plug set included.

115/60/1
NEMA-5-15R

OPTIONAL FEATURES/ACCESSORIES
Upcharge and lead times may apply.
- ❑ Barrel locks (factory installed). Requires one per door.
- ❑ Additional shelves.
- ❑ 30" (762 mm) deep, ½" thick (13 mm), white polyethylene cutting board.
- ❑ 30" (762 mm) deep, ½" thick (13 mm), composite cutting board.
- ❑ Heavy duty 16 gauge tops.
- ❑ Exterior rectangular digital thermometer (factory installed).
- ❑ Standard height units with 5" (127 mm) diameter castors. 36" (915 mm) work surface height.
- ❑ ADA compliant models with 34" (864 mm) work surface height.

PLAN VIEW

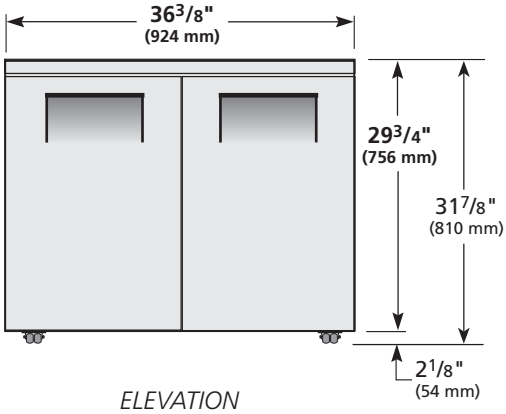

ELEVATION

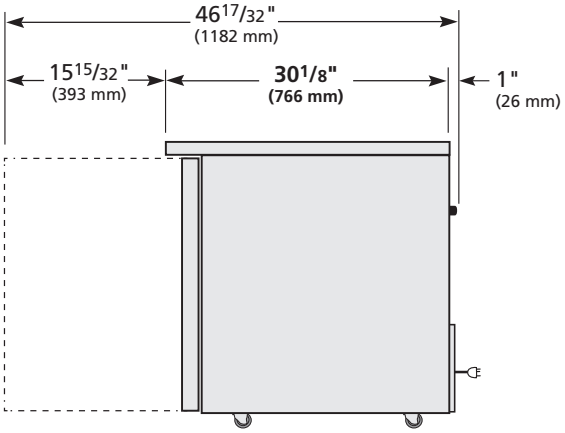

RIGHT VIEW

WARRANTY
Three year warranty on all parts and labor and an additional 2 year warranty on compressor. (U.S.A. only)

METRIC DIMENSIONS ROUNDED UP TO THE NEAREST WHOLE MILLIMETER

SPECIFICATIONS SUBJECT TO CHANGE WITHOUT NOTICE

Model	Elevation	Right	Plan	3D	Back
TUC-36-LP-HC	TFPY45E	TFPY45S	TFPY25P	TFPY453	

TRUE MANUFACTURING CO., INC.
2001 East Terra Lane • O'Fallon, Missouri 63366-4434 • (636)240-2400 • Fax (636)272-2408 • Toll Free (800)325-6152 • Intl. Fax# (001)636-272-7546 • www.truemfg.com