BACK BAR EQUIPMENT

Model: BBC50S-GD-PT

50” Back Bar Display Cooler
with Hinged Glass Doors
Shallow Depth, Pass-Thru

Textured baked black enamel finish exterior, stainless steel countertop, heavy-duty galvanized steel interior side panels and top, stainless steel interior back and reinforced stainless steel floor.
Designed to maintain NSF-7 temperatures in 100°F ambient.

Project Name:

Model Specified:

Location:

Item No: **Quantity:**

AIA #: **SIS #:**

Options and Accessories

(upcharge and lead times may apply)

Casters or legs	Expansion valve system
Stainless steel exterior (-SS models)	Automatic, electric condensate evaporator
Food storage rated stainless steel interior (NSF-7)	Riser base (field installed)
Solid doors in lieu of glass doors	Condensing unit on right
Add’l epoxy-coated shelves with clips	Wine rack
Stainless steel shelves with clips	Standard depth

** Adding a Riser Base increases overall height 2”*

Standard Model Features

REFRIGERATION SYSTEM

- Performance-rated **front breathing** refrigeration system
- Environmentally-safe R-134a refrigerant
- Automatic, energy-saving, non-electric condensate evaporator
- Extra large, balanced evaporator coil

CABINET ARCHITECTURE

- High density, non-CFC polyurethane foamed-in-place insulation
- Double pane, tempered Low-e hinged glass doors
- Heavy-duty epoxy-coated steel shelves
- Magnetic snap-in gasket (each door)
- Cylinder-keyed security lock (each door)
- Stainless steel reinforced threshold

MODEL FEATURES

- Low profile cabinet design
- Electronic controller w/ digital display & hi-low alarm
- Easily accessible and serviceable slide-out condensing unit
- Front, rear and side venting louvered grills
- LED interior lighting

Continental® Refrigerator

Toll-Free: 800-523-7138
Phone: 215-244-1400
Fax: 215-244-9579

539 Dunksferry Road
Bensalem, PA 19020
www.continentalrefrigerator.com

APPROVAL:

Model Specifications

DIMENSIONAL DATA

Net Capacity (cu. ft.)	13 (368 cu l)
Width, Overall (in.)	50 (1270 mm)
Depth, Overall (in.) (incl. handles)	26 1/4 (667 mm)
Depth, Body Only (in.) (less doors)	21 (533 mm)
Height, Overall (in.)	34 3/4 (883 mm)
Barrel Capacity (# barrel type kegs)	0
Straight Wall Capacity (# straight wall kegs)	2
No. of Doors	2
No. of Shelves	4

REFRIGERANT DATA

Condensing Unit Size (H.P.)	1/3
Capacity (BTU/Hr)*	1800

ELECTRICAL DATA

Voltage (int'l)	115/60/1 (220/50/1)
Feed Wires (incl. ground)	3
Total Amps (int'l)	3.77 (2.8)
10 ft. Cord/Plug [attached] (int'l)	Yes (No)

SHIPPING DATA

Weight (lbs.)	365 (166 kg)
Height - Crated (in.)	46 (1168 mm)
Width - Crated (in.)	58 (1473 mm)
Depth - Crated (in.)	42 (1067 mm)

** Rating @ +25°F evaporator, 90°F ambient*
Figures in parentheses reflect metric equivalents rounded to the nearest whole unit.

Model Plan Views

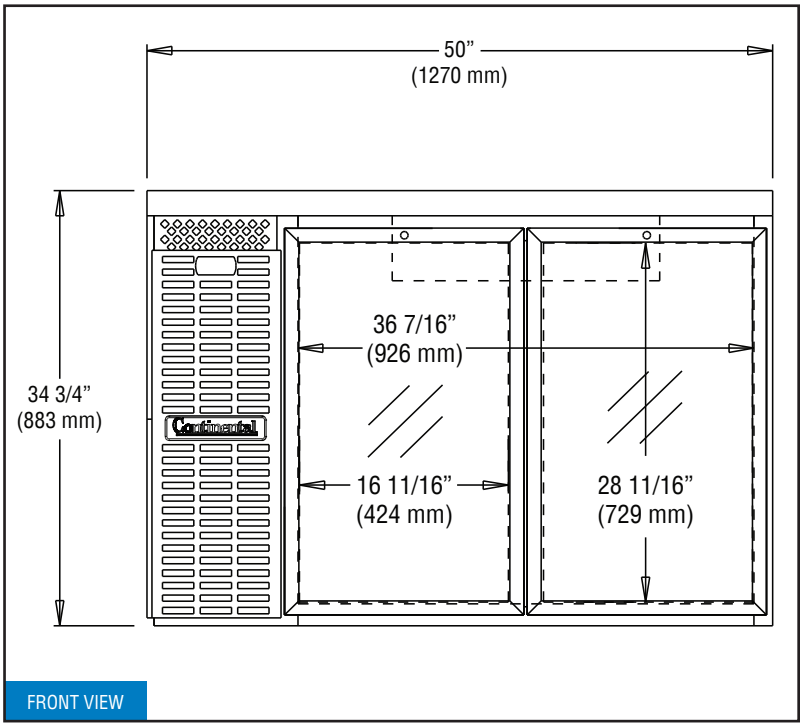

FRONT VIEW

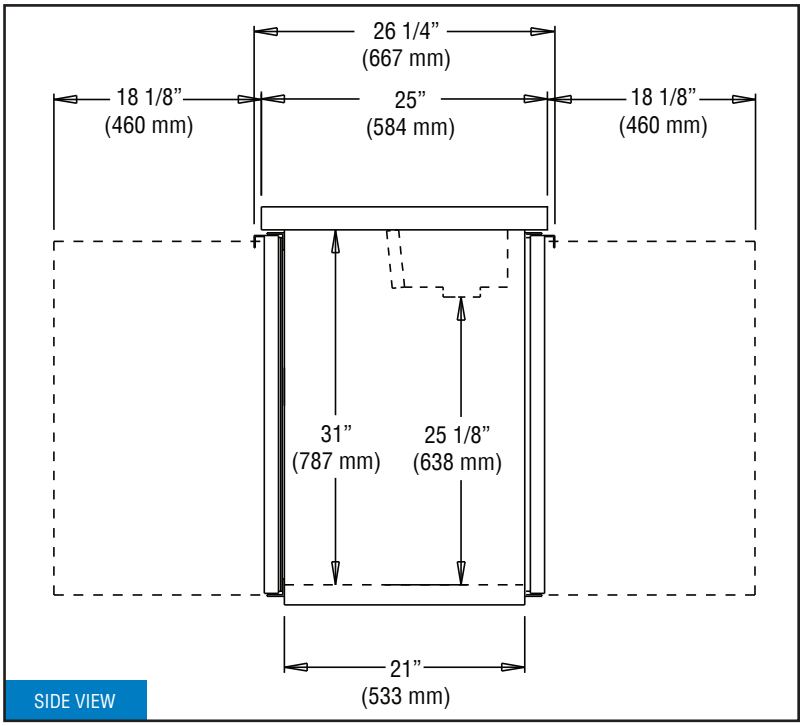

SIDE VIEW

IMPORTANT NOTE: Models are completely front breathing and take in and exhaust air through the front grill. A clearance of 1" on the back and 3" on the sides is recommended.

Continental Refrigerator

Toll-Free: 800-523-7138
Phone: 215-244-1400
Fax: 215-244-9579

539 Dunksferry Road
Bensalem, PA 19020
www.continentalrefrigerator.com

Due to our continued efforts in developing innovative products, specifications subject to change without notice.

Intertek

MADE IN THE U.S.A.

© Copyright 2017. Continental Refrigerator.
A Division of National Refrigeration & Air Conditioning Products, Inc.